Customer Name

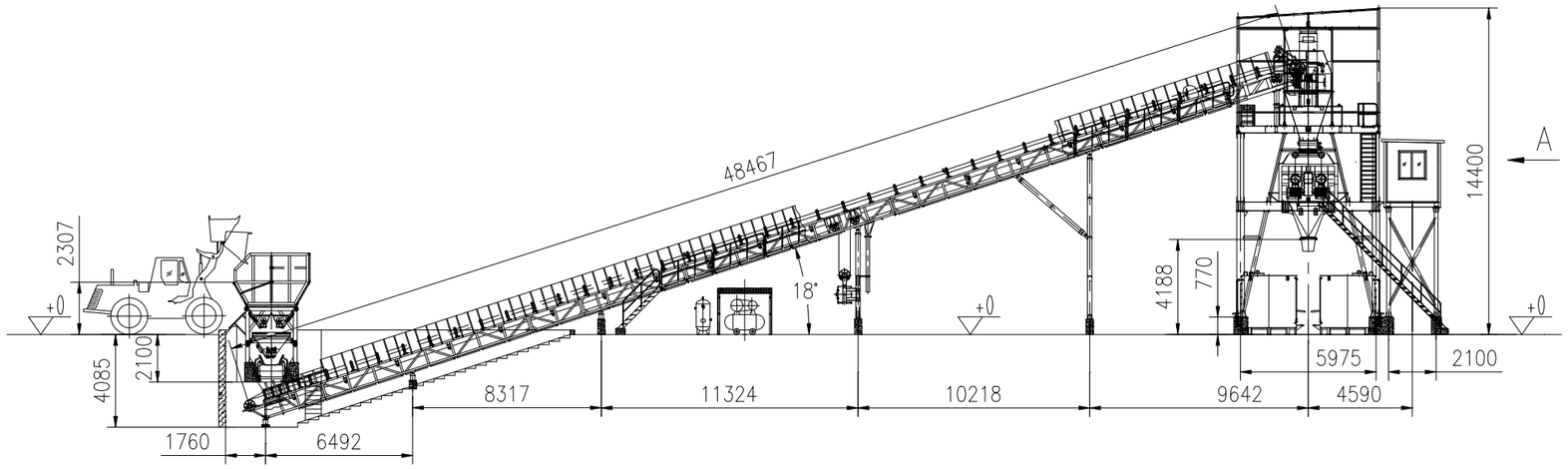

A
(without slant belt conveyor etc.)

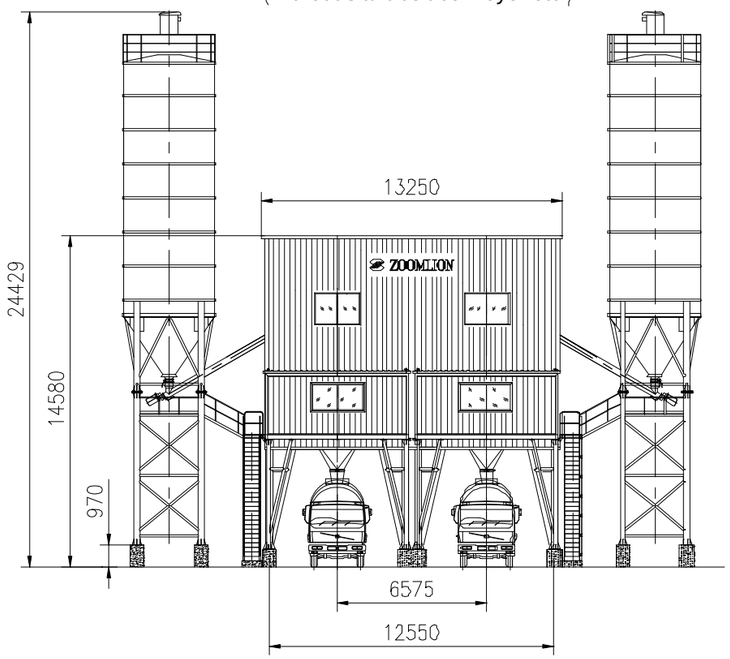

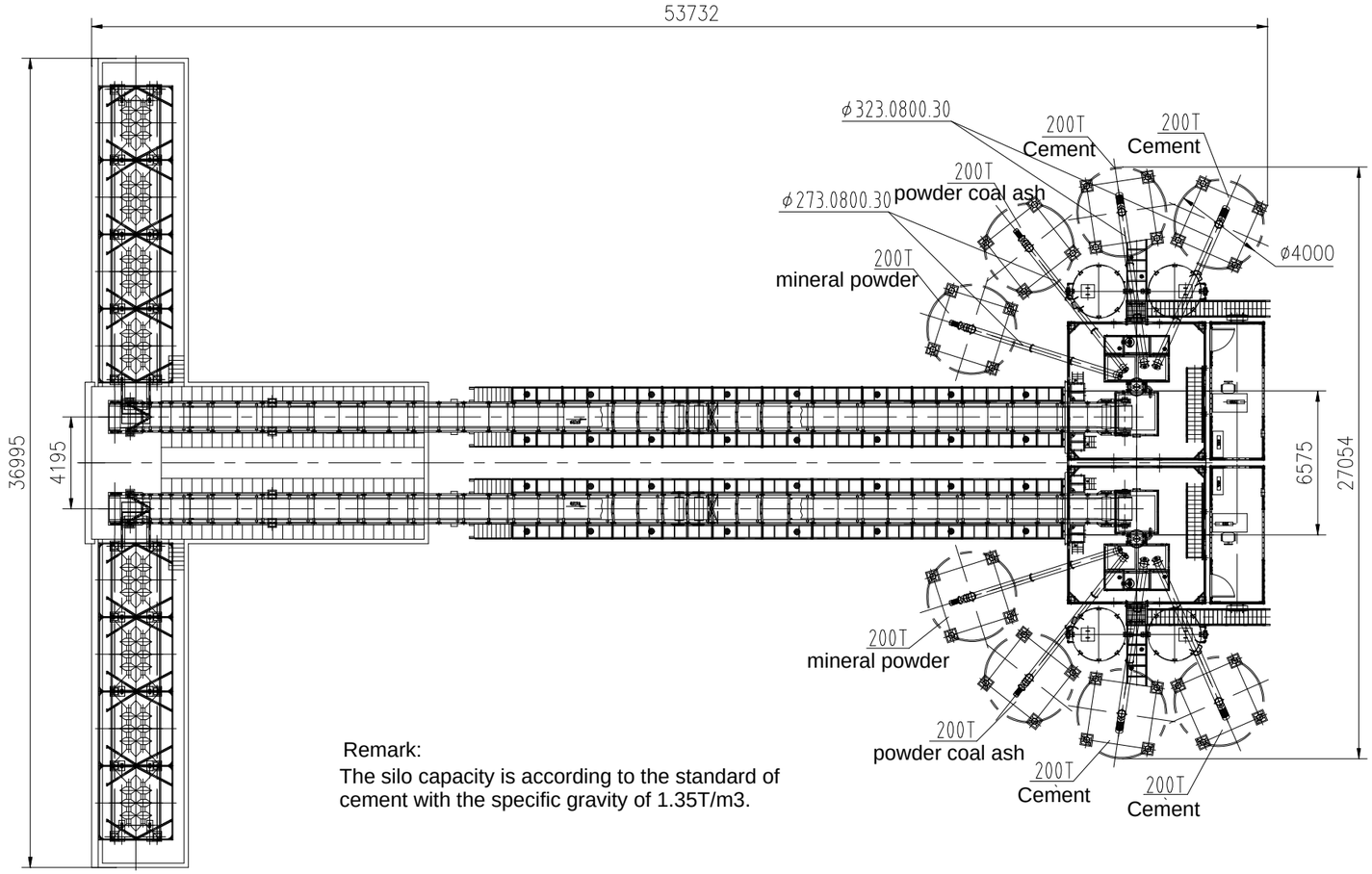

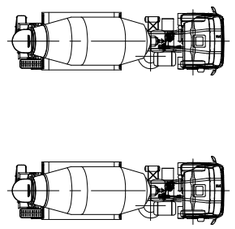

Remark:
The silo capacity is according to the standard of cement with the specific gravity of 1.35T/m3.

Major Technical Data

Max. Thero Production Capacity	(m³/h)	2×180
Discharge Height	(m)	4
Main Mixer Model		MAO4500/3000SDSHO
Production Time	(s)	60
Capacity of Aggregate Hopper	(m³)	2×4×30
Capacity of Belt Conveyor	(t/h)	900
Capacity of Spiral Conveyor	(t/h)	110
Total Power	(kW)	2×260
Batching Range and Accuracy of Aggregates	(kg)	(0-4500)±2%
Batching Range and Accuracy of Cement	(kg)	(0-1500)±1%
Batching Range and Accuracy of Flyash	(kg)	(0-700)±1%
Batching Range and Accuracy of Water	(kg)	(0-700)±1%
Batching Range and Accuracy of Additive	(kg)	(0-50)±1%

ZOOMLION
2×HZS180 Concrete Mixing Plant
Equipment Layout Drawing
Customer Name